

Hamilton Arc Wi Pivot Adapters

Operating Instructions

REF 111011131/01

2026-07-17

HAMILTON

Copyright © 2026 Hamilton AG, Bonaduz Switzerland. All rights reserved. The reproduction of any part of this document in any form is forbidden without the express written agreement of Hamilton AG.

Contents of this manual can be modified without previous announcement. Technical modifications reserved. Greatest possible care was used on the correctness of the information in this manual. If errors should be discovered nevertheless, Hamilton AG is pleased to be informed about it. Regardless of this, Hamilton AG cannot assume liability for any errors in this manual or for their consequences.

Liability

The liability of Hamilton AG is described in detail in the document "*General Terms and Conditions of Sale and Delivery*" in their current version. Hamilton expressly disclaims liability for direct or indirect damages resulting from the use of the sensors. Users are reminded that sensors have a limited-service life, which depends on the specific application and operating conditions. Malfunctions may therefore occur at any time.

The user is solely responsible for the calibration, maintenance, and regular replacement of the sensors. For critical sensor applications, Hamilton recommends the use of backup measuring points to avoid consequential damage. The user is responsible for taking appropriate precautions in the event of sensor failure.

To download the latest version of the *General Terms and Conditions of Sale and Delivery*, visit the Hamilton Process Analytics website: https://www.hamiltoncompany.com/general-terms-and-conditions#purchase

Table of Contents

	Document History	6
	Preface	7
Chapter 1	Introduction	8
Chapter 2	Product Overview	9
Chapter 3	Wiring: VP8 or M12 Pin Assignment and Configuration	12
Chapter 4	Technical Specifications: Electrical and Environmental Limits	19
Chapter 5	Sensor Status Indicator	20
Chapter 6	Bluetooth® Certifications	24
Chapter 7	Compliance Markings	28
Chapter 8	Parts and Accessories	29
Chapter 9	Disposal and Recycling Information	31

Document History

Manual revision No.	Date of issue	Change summary
00	January 2026	The first release of the Hamilton Arc Wi Pivot Adapters Operating Instructions
01	July 2026	• Updated Bluetooth® Certification chapter: Added Chinese Bluetooth® certification reference for the Hamilton Arc Wi Pivot Adapters • General updates: Content and graphics

Preface

Conventions used in this guide/manual

Safety messages are displayed as follows:

⚠ WARNING

Alerts the user to the risk of injury, death, or other severe adverse reactions associated with the correct or incorrect use of the device.

⚠ CAUTION

Alerts the user to the possibility of a problem with the device associated with its use or misuse, such as device malfunction, device failure, damage to the device, or damage to other property.

NOTICE

Emphasizes information of particular importance.

1 Introduction

The Hamilton Arc Wi Pivot Adapter provides wireless communication between the Hamilton Arc sensors and mobile devices via Bluetooth® 5.0. The Hamilton Arc Wi Pivot Adapter is designed to allow Plug & Play for every Hamilton Arc sensor type with VP head.

The Hamilton Arc Wi Pivot Adapter with mA interface provides internal galvanic isolators for enhanced analog signal quality and simplifies analog connection between the Hamilton Arc sensors and Process Control system (PCS). Connection to the process control system is simplified.

The Hamilton Arc Wi Pivot Adapter is mounted between the VP head of an Arc sensor and the VP sensor cable. All analog and digital signals go through the Hamilton Arc Wi Pivot Adapter for every Arc sensor type with VP head.

Key features of the Hamilton Arc Wi Pivot Adapter

- Miniaturization of components to reduce size and simplify installation
- Rotatable head: 270° rotation to facilitate installation and cable connection
- Incorporates Bluetooth® (BT) 5.x standard to allow encrypted Peer-to-Peer (P2P) connection.
- Increase BT performance and advertiser data size to support future Arc sensors and improve connectivity

2 Product Overview

Hamilton Arc Wi Pivot Adapter BT: Configuration Adapter

Figure 2-1. Hamilton Arc Wi Pivot Adapter BT : The configuration adapter allows the analog signal from the sensor sensor to be routed



Hamilton Arc Wi Pivot Adapter BT mA 2

Figure 2-2. Hamilton Arc Wi Pivot Adapter BT mA 2 : 2-Parameter adapter with BT and 4-20 mA analog interface



Hamilton Arc Wi Pivot Adapter mA 2

Figure 2-3. Hamilton Arc Wi Pivot Adapter mA 2 : 2-Parameter adapter with 4-20 mA analog interface



Overview of the Hamilton Arc Wi Pivot Adapter Variants

Product Description	Function	Sensor connector	System connector	BT	4-20 mA analog interface
Hamilton Arc Wi Pivot Adapter BT (REF 10191873-1110): Configuration Adapter with BT	▸ RS-485 interface ▸ Bluetooth®	VP8	VP8	✓	–
Hamilton Arc Wi Pivot Adapter BT mA 2 (REF 10191873-1212): BT & 4-20 mA analog interface	▸ RS-485 interface ▸ 2-Parameter adapter: 2 x Galvanic isolators / 4-20 mA analog interface ▸ Bluetooth®	VP8	M12 8-pole	✓	✓
Hamilton Arc Wi Pivot Adapter mA 2 (REF 10191873-1202): 4-20 mA Analog Interface	▸ RS-485 interface ▸ 2-Parameter adapter: 2 x Galvanic isolators with 4-20 mA analog interface	VP8	M12 8-pole	–	✓

NOTICE

Modbus communication configuration:

- **Documentation requirement:** Always make sure that you select the appropriate Programmer's Manual for the specific sensor in use.
- **Hardware impact:** The Hamilton Arc Wi Pivot Adapter does not affect or alter the command set of sensor.

NOTICE

Communication reliability:

- **Response times:** Note that the response times can be slightly delayed when communicating via the Hamilton Arc Wi Pivot Adapter.
- **Recommended setting for timeout:** Increase your Modbus timeout to **1000 milliseconds** to improve reliability of the system.

3 Wiring: VP8 or M12 Pin Assignment and Configuration

Always use Hamilton VP8 or M12 sensor cables for safe connection. The VP8 or M12 sensor cables are available in different lengths (see Chapter 8).

VP8 cable Pin assignment for Hamilton sensors

Table 3-1. VP8 connector Pin assignment

VP Pin	Function	Double coaxial cable description	Data cable description
A	4–20 mA, Interface #2	Coaxial core, black transparent	Yellow
B	4–20 mA, Interface #1	Coaxial shield, black	Green
C	Power supply: +24 VDC (7–30 VDC)	Coaxial core, red transparent	Red
D	Power supply ground/earth: 0 VDC	Coaxial shield, red	Blue
E	Sensor specific*	White	Brown
F	Sensor specific*	Green	White
G	RS-485 A	Yellow	Gray
H	RS-485 B	Brown	Pink

Where:

* *For details, refer to the corresponding sensor manual.*

Overview of the Hamilton Arc Wi Pivot Adapter setup with VP8 open-end cable

Figure 3-1. Hamilton Arc Wi Pivot Adapter / sensor electrical connection with VP8 cable

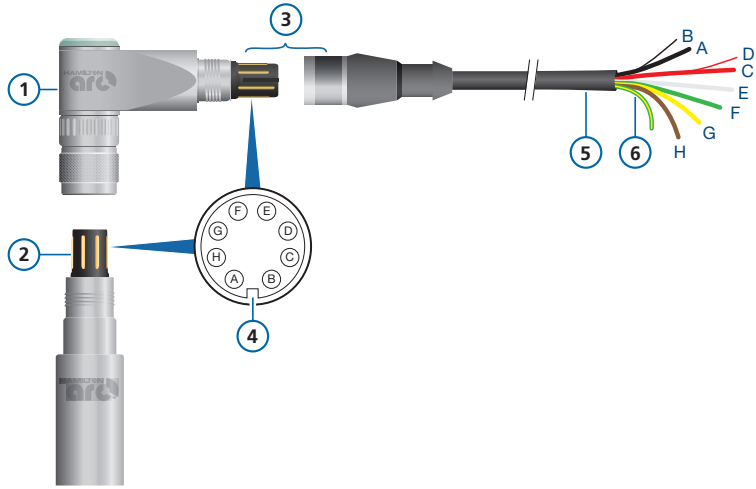

1	Hamilton Arc Wi Pivot Adapter	4	A notch on the VP8 head for the sensor connector alignment
2	VP8 connector for sensor	5	Sensor cable shield
3	VP8 connection between adapter and sensor cable	6	VP8 earth/ground cable (Yellow/Green)

Wiring: Process Control System (PCS) configuration with an active 4-20 mA input card without galvanic isolation

⚠ CAUTION

Electrical safety requirement: *Hamilton Arc Wi Pivot Adapter grounding*

For grounding or earth connection, refer to the applicable sensor Operating Instructions.

Figure 3-2. Connecting the Hamilton Arc Wi Pivot Adapter to a PCS with an active 4-20 mA input card without galvanic isolation

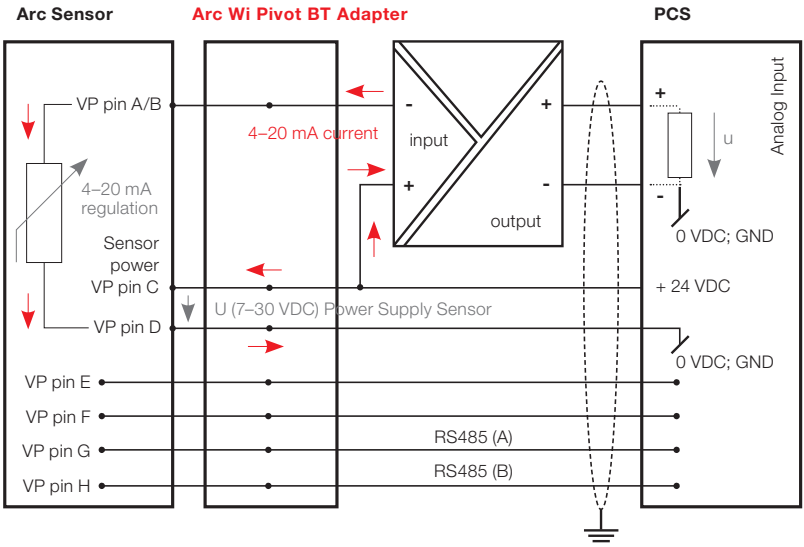

M12 8-pole (A coded) cable Pin assignment for Hamilton sensors

Table 3-2. M12 8-pole (A coded) Pin assignment

M12 Pin	Function	Cable description	Description
1	+ 4 to +20 mA, Interface #1	White	• The 4-20 mA two-wire interface functions as a current sink and needs to be powered. It regulates the input current according to the measurements of the sensor. • The 4-20 mA two-wire is galvanically isolated from the power supply.
2	-4 to +20 mA, Interface #1	Brown	
3	+4 to +20 mA, Interface #2	Green	
4	-4 to +20 mA, Interface #2	Yellow	
5	RS-485 (A)	Gray	Modbus RTU RS-485
6	RS-485 (B)	Pink	Modbus RTU RS-485
7	GND	Blue	Ground/earth: 0 VDC
8	+24 VDC	Red	Power supply: +24 VDC (7–30 VDC) **NOTICE!** The power supply can be external but not from the PCS.

Overview of the Hamilton Arc Wi Pivot Adapter setup with M12 8-Pole / open-end cable

Figure 3-3. Hamilton Arc Wi Pivot Adapter / sensor electrical connection: VP8 connector Pin assignment / M12 8-pole open-end cable (female connector)

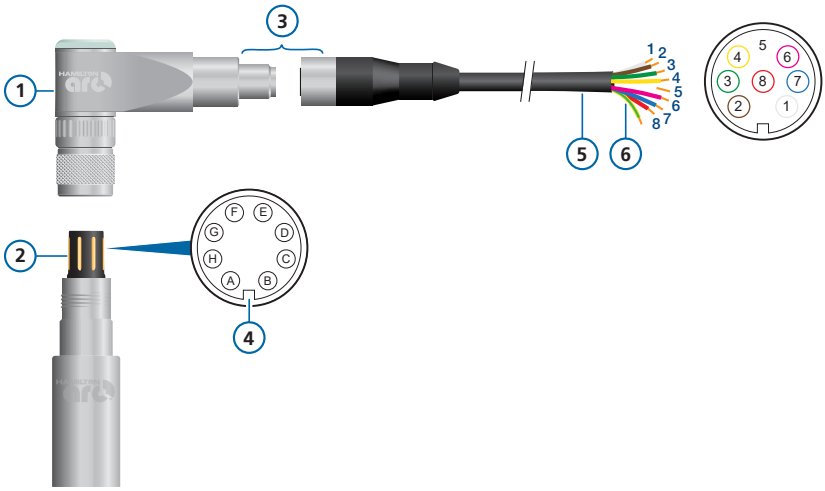

1	Hamilton Arc Wi Pivot Adapter	4	A notch on the VP8 head for the sensor connector alignment
2	VP8 connector	5	Sensor cable shield
3	M12 8-Pole connection between adapter (male connector) and sensor cable (female connector)	6	VP8 earth/ground cable (Yellow/Green)

Wiring: PCS configuration with an active 4-20 mA input card without galvanic isolation

Figure 3-4. Connecting the Hamilton Arc Wi Pivot Adapter to a PCS with an active 4-20 mA input card without galvanic isolation

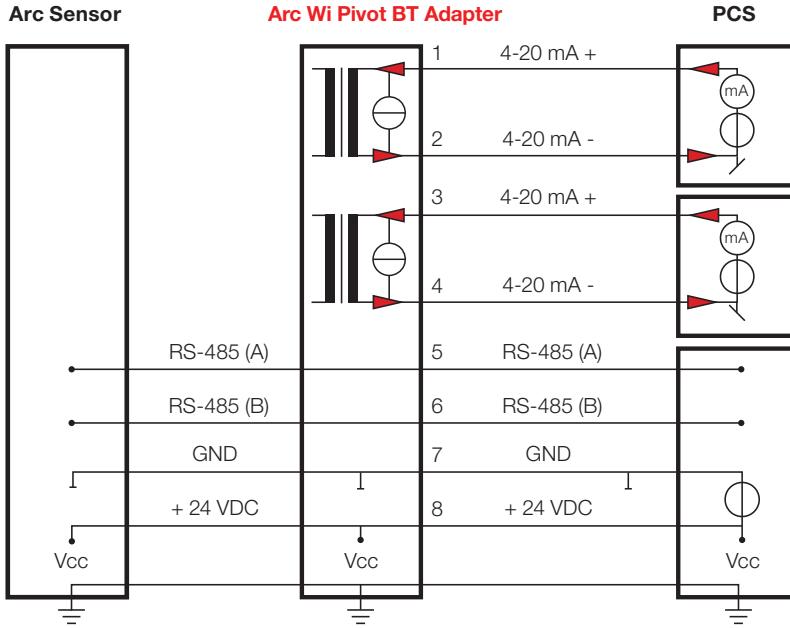

Wiring: PCS configuration with a passive 4-20 mA input card without galvanic isolation

Figure 3-5. Connecting the Hamilton Arc Wi Pivot Adapter to a PCS with a passive 4-20 mA input card without galvanic isolation

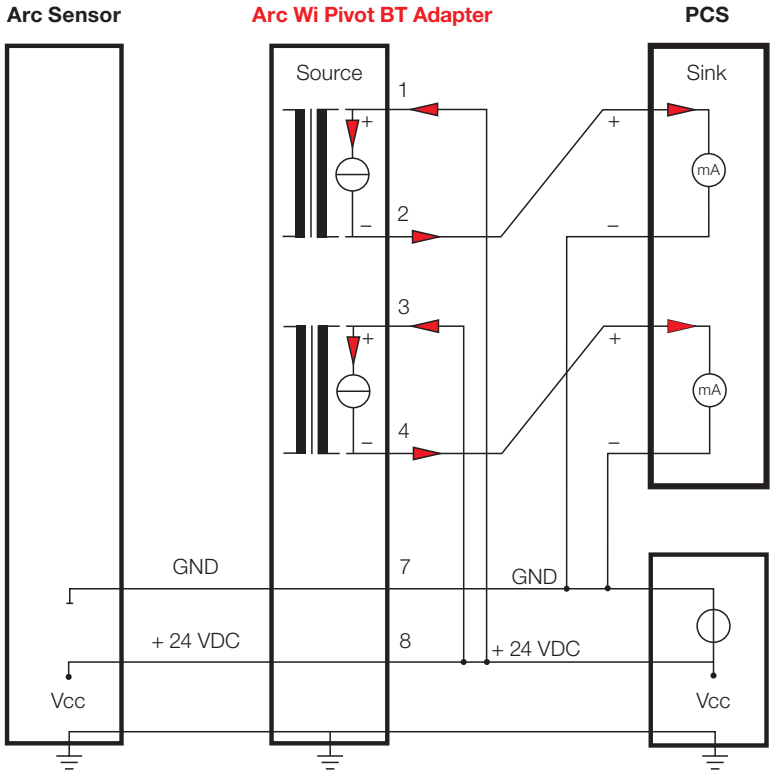

4 Technical Specifications: Electrical and Environmental Limits

The following electrical and environmental limits must be observed for safe installation and operation.

Table 4-1. Hamilton Arc Wi Pivot Adapters technical specifications: Electrical and environmental uimits

Technical Specifications: Electrical and Environmental Limits	
Operating voltage range:	7 to 30 VDC
Max. current consumption (VCC):	< 10 mA (at 24 V, without the sensor connected)
Operating temperature range:	+2 to +70°C
Transport temperature range:	-30 to +60°C for 72 Hrs (Specification: ASTM D4169-13, ISTA 2A)
Humidity (operating and storage):	30 to 90%
Storage conditions:	+4 to +40°C
Ingress protection rating:	IP65 (when connected to the sensor and cable)

5 Sensor Status Indicator

The top part of the Hamilton Arc Wi Pivot Adapter is made of transparent, round plastic, housing an LED that shows the sensor status and connection state in alternating mode. Table 5-1 provides an overview of the Sensor Status Indicator.

Table 5-1. Overview of the sensor status indicator

LED status indicator characteristic	LED description of sensor status	Remark/Troubleshooting
Sensor startup: 	The LED will flash in the following sequence during the sensor startup: Blue > Red > Yellow > Green > Magenta	The LED will continuously flash, alternating all five colors, until the sensor startup is complete.
No communication: 	The LED will flash in the following sequence if communication is not established between the sensor and the adapter: Red > Off > Red > Off	There is no communication between the sensor and the adapter. Check the connections: Make sure that all the cables are securely connected. Power cycle: Unplug the sensor and adapter, wait for a few seconds, then connect them again. This can sometimes reset the connection.

LED status indicator characteristic	LED description of sensor status	Remark/Troubleshooting
Sensor found without active Bluetooth®: ▶  ▶  ▶ 	• Red LED = Error • Yellow LED = Warning • Green LED = OK	**⚠ CAUTION!** You must acknowledge Warnings by following through with the recommended corrective actions. The required corrective action will vary for each warning depending on the root cause. The warning will be displayed continuously until the corrective action is completed. **⚠ CAUTION!** You must resolve sensor Errors by following through with the recommended corrective actions.

LED status indicator characteristic	LED description of sensor status	Remark/Troubleshooting
Sensor found with active Bluetooth® but not connected. Three different LED flashing sequences: **LED sequence 1:**  **LED sequence 2:**  **LED sequence 3:** 	The LED will flash in the following sequence while the adapter is in Bluetooth® advertising mode. LED flashing sequences: 1. Green > Short blue (short flash) > Green (Sensor status: **Sensor status:** No `Warnings` or `Errors` are indicated by the sensor. 2. Yellow > Short blue (short flash) > Yellow **Sensor status:** At least one `Warning` is indicated by the sensor. 3. Red > Short blue (short flash) > Red **Sensor status:** At least one `Error` is indicated by the sensor.	–

LED status indicator characteristic	LED description of sensor status	Remark/Troubleshooting
Sensor found with active Bluetooth® and established Peer-to-Peer communication: LED sequence 1:  LED sequence 2:  LED sequence 3: 	The LED will flash in the following sequence when the adapter has established a Bluetooth® peer to peer connection with the sensor: LED flashing sequence: 1. Green > Long blue (long flash) > Green **Sensor status:** No `Warnings` or `Errors` are indicated by the sensor. 2. Yellow > Long blue (long flash) > Yellow **Sensor status:** At least one `Warning` is indicated by the sensor. 3. Red > Long blue (long flash) > Red **Sensor status:** At least one `Error` is indicated by the sensor.	–
Sensor identification command: 	The LED will flash in the following sequence while the adapter tries to identify the sensor: Magenta > Off > Magenta > Off > Magenta	Sensor Bluetooth® identification: A constant Magenta LED indicates an active Bluetooth® connection

6 Bluetooth® Certifications

⚠ CAUTION

Bluetooth® security and access control:

- *Unauthorized access to the wireless configuration via Bluetooth® can damage or misconfigure the device, whether through malicious tampering or accidental interference. To prevent system security breach or tempering, make sure that only authorized devices and personnel can access Bluetooth-enabled features.*
- *Wireless security is essential to protect the system and users' assets. Implement secure pairing, strong passwords, and encryption across all Bluetooth-connected systems.*

FCC Certification

⚠ CAUTION

FCC compliance:

- *This equipment has been tested and found to comply with the limits for a Class A digital device, pursuant to Part 15 of the FCC Rules. These limits are designed to provide reasonable protection against harmful interference when the equipment is operated in a commercial environment.*
- *This equipment generates, uses, and can radiate radio frequency energy and, if not installed and used in accordance with the instruction manual, may cause harmful interference to radio communications.*
- *Operation in a residential area is likely to cause harmful interference, in which case the user will be required to correct the interference at their own expense.*

⚠ CAUTION

Modification risks:

Changes or modifications to this equipment not expressly approved by Hamilton may void the FCC authorization to operate this device.

NOTICE

Bluetooth® certification applicability:

- The Bluetooth® certification only applies to Arc Wi Pivot BT (REF 10191873-1110) and Arc Wi Pivot BT mA – 2 O/P (REF 10191873-1212).
- The Arc Wi Pivot mA – 2 O/P (REF 10191873-1202) does not have Bluetooth® functionality.

FCC certification: Part 15 of the FCC Rules and with Industry Canada licence-exempt RSS standard(s)

Hamilton
HVIN: 243460

FCC ID: XPYANNAB4
IC ID: 8595A-ANNAB4

This device complies with Part 15 of the FCC Rules and with Industry Canada licence-exempt RSS standard(s). Operation is subject to the following two conditions:

(1) this device may not cause harmful interference, and

(2) this device must accept any interference received, including interference that may cause undesired operation.

Le présent appareil est conforme aux CNR d'Industrie Canada applicables aux appareils radio exempts de licence. L'exploitation est autorisée aux deux conditions suivantes:

(1) l'appareil ne doit pas produire de brouillage, et

(2) l'utilisateur de l'appareil doit accepter tout brouillage radioélectrique subi, même si le brouillage est susceptible d'en compromettre le fonctionnement.

Japanese Radio Law and Japanese Telecommunications Business Law Compliance

Japanese Radio Law and Japanese Telecommunications Business Law Compliance

This device is granted pursuant to the Japanese Radio Law (電波法) and the Japanese Telecommunications Business Law (電気通信事業法). This device should not be modified (otherwise the granted designation number will become invalid).

R 210-183023

Bluetooth® Certification for China

China Bluetooth® Certification: CMIIT ID 25J993CLD311

Bluetooth® Certification for India

India Bluetooth® Certification:

Arc Wi Pivot BT mA 2: ETA-SD-20251109995

Arc Wi Pivot BT: ETA-SD-20251109998

Bluetooth® Certification for South Korea

South Korea Bluetooth® Certification: R-C-ULX-ANNA-B402

사용자안내문

이 기기는 업무용 환경에서 사용할 목적으로 적합성평가를 받은 기기로

서 가정용 환경에서 사용하는 경우 전파간섭의 우려가 있습니다.

Bluetooth® Certification for Taiwan

Taiwan Bluetooth® Certification

內含發射器模組： CCAJ23Y100E0T2

Bluetooth® Certification for Brazil

Brazil Bluetooth® Certification

ANATEL

11149-22-05903

Bluetooth® Certification for Australia and New Zealand

Australia and New Zealand Bluetooth® Certification

Bluetooth® Certification for South Africa

South Africa Bluetooth® Certification: TA-2022/2477

ICASA APPROVED

7 Compliance Markings

Canadian compliance marking for electromagnetic interference (EMI): CAN ICES-001(B) / NMB-001(B)

The Hamilton Arc Wi Pivot Adapter complies with specific radio frequency emission standards set by Innovation, Science and Economic Development Canada (ISED).

Table 7-1. Canadian compliance marking for EMI

	Canadian compliance marking for EMI
Marking:	CAN ICES-001(B) / NMB-001(B)

8 Parts and Accessories

VP8 double coaxial / open-end data cable

The VP8 Sensor Data Cable with open-end wires is designed to enable interface connection between the sensor and a data recorder, indicator, control unit, or PCS with an analog I/O (input/output).

Table 8-1. VP8 double coaxial / open-end data cable

REF	Product description	Length	Interface
355263	VP8 double coaxial / open-end data cable	1 m	4-20 mA/Modbus
355264	VP8 double coaxial / open-end data cable	3 m	4-20 mA/Modbus
355265	VP8 double coaxial / open-end data cable	5 m	4-20 mA/Modbus
355266	VP8 double coaxial / open-end data cable	10 m	4-20 mA/Modbus
355267	VP8 double coaxial / open-end data cable	15 m	4-20 mA/Modbus
355268	VP8 double coaxial / open-end data cable	20 m	4-20 mA/Modbus
355217	VP8 double coaxial / open-end cable	1 m	ECS mode*
355218	VP8 double coaxial / open-end cable	3 m	ECS mode*
355219	VP8 double coaxial / open-end cable	5 m	ECS mode*
355220	VP8 double coaxial / open-end cable	10 m	ECS mode*
355221	VP8 double coaxial / open-end cable	15 m	ECS mode*
355222	VP8 double coaxial / open-end cable	20 m	ECS mode*

Where:

* *Only applicable to VisiFerm DO Sensors.*

M12 8-pole with open-end cable

The M12 8-Pole Sensor Cable with open-end wires is designed to enable interface connection between the sensor and a data recorder, indicator, control unit, or PCS with analog I/O.

Table 8-2. M12-8 pole with open-end cable

REF	Product description	Length (m)
355320	M12 8-Pole / open-end cable	3 m
355321	M12 8-Pole / open-end cable	5 m
355322	M12 8-Pole / open-end cable	10 m

9 Disposal and Recycling Information

⚠ CAUTION

Product disposal and recycling:

- *Do not dispose of products at an unsorted waste disposal point.*
- *Hamilton products that are worn out or no longer required must be sent to a dedicated collection point for electrical and electronic devices.*

NOTICE

Return product to Hamilton for disposal:

You can also send the product to Hamilton for disposal.

The design of the Hamilton products optimally considers environmental compatibility and regulations compliance (see Table 9-1).

Table 9-1. Symbols used on the product labels and packaging

Symbol	Definition
	Dispose of in accordance with the EU Directive 2012/19/EU or WEEE (Waste Electrical and Electronic Equipment)
	有關危險物質的列表，請參閱 Hamilton Process Analytics 符合性聲明。如需了解更多信息，請訪問 Hamilton 的網站：www.hamiltoncompany.com。 For a list of hazardous substances, see the Hamilton Process Analytics Declaration of Conformity. For additional information, visit the Hamilton website: www.hamiltoncompany.com.

More information and free software simulation:
www.hamiltoncompany.com/process-analytics

Hamilton Europe, Asia & Africa
Via Crusch 8, 7402 Bonaduz, Switzerland
☎ +41 (0)58 610 10 10
contact.pa.ch@hamilton.ch

Website & Contact Details:
Web: www.hamiltoncompany.com
☎ USA: 800 648 5950
☎ Europe: +41 58 610 10 10

To find a representative in your area, please visit www.hamiltoncompany.com