Property of HAMILTON Bonaduz AG

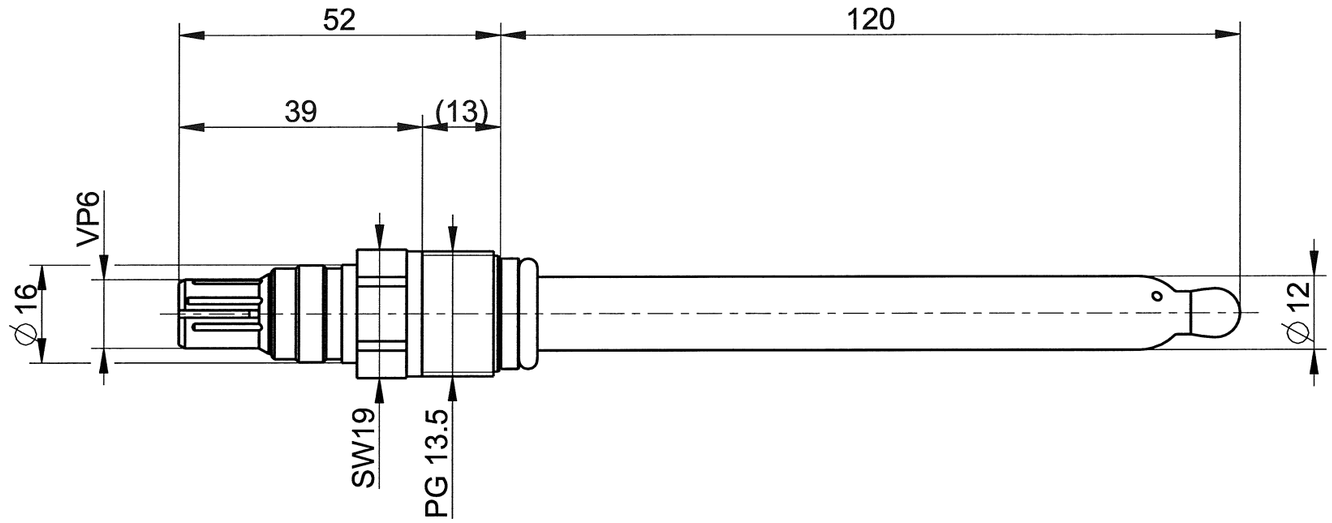

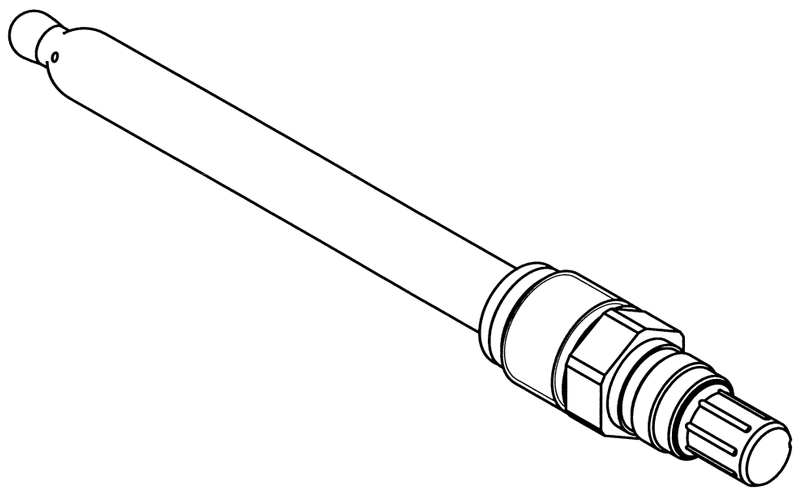

Information in this document is valid only for the revision indicated and may be subject to change without notice!

Dimensions without tolerances are for infomation purpose only!

Modelnumber	238437	ECO number	13667
Model rev.	02-4-Released	ECO date	04.02.2014
Object type	ASSEM	Name	M.Miclaus
Drawing rev.	02-1-Released		

MecoTrode VP 120

Material		[mm]	Scale 1/1
			Size A3
Drawn	M.Tanasie	2013-12-11	Sheet 1
Checked			of 1

HAMILTON

HAMILTON Bonaduz AG
Via Crusch 8
CH-7402 Bonaduz

SZC238437

Rev. 02